# DL-7 Pin Up Dimensions

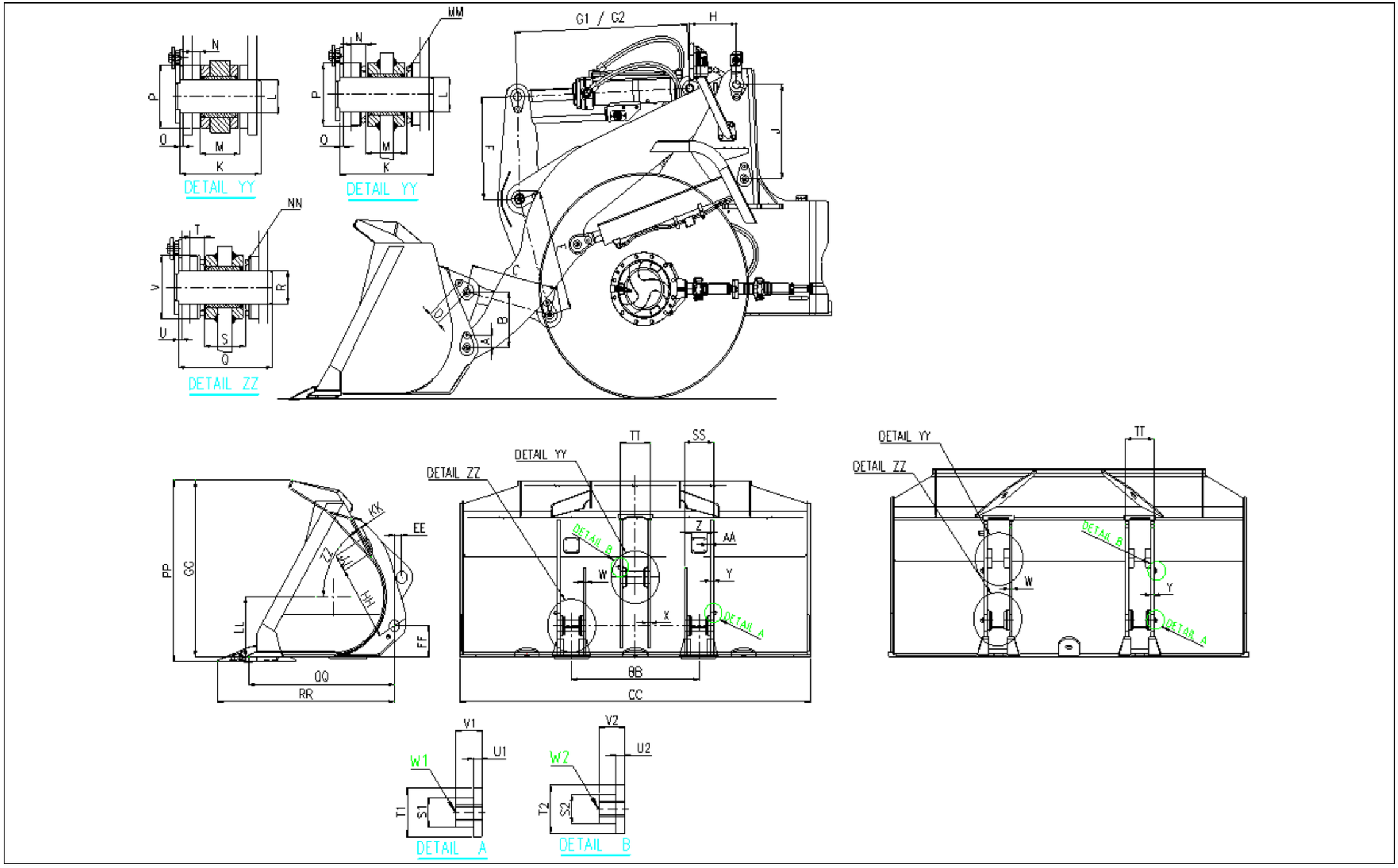

# DL-7 Pin Up Dimensions

| Dimension | Description | DL200-7 | DL200-7 HL | DL200TC-7 | DL220/250-7 | DL220/250-7 HL | DL250TC-7 | DL280-7 | DL280-7 HL | DL320-7 | DL320-7 HL | DL380-7 | DL380-7 HL | DL420-7 | DL420-7 HL | DL480-7 | DL480-7 HL | DL550/580-7 | DL550/580-7 HL | REMARK |
|---|---|---|---|---|---|---|---|---|---|---|---|---|---|---|---|---|---|---|---|---|
| A | | 90±1 | 90±1 | 80±1.0 | 90 | 90 | 100±1.0 | 100±1.0 | 100±1.0 | 105±1.0 | 105±1.0 | 105±1.0 | 105±1.0 | 105±1.0 | 105±1.0 | 110±0.5 | 110±0.5 | 125±0.5 | 125±0.5 | |
| B | | 345±0.5 | 345±0.5 | 400±0.5 | 345±0.5 | 345±0.5 | 430±1.0 | 380±1.0 | 380±1.0 | 380±0.5 | 380±0.5 | 380±0.5 | 380±0.5 | 400±0.5 | 400±0.5 | 423±0.5 | 423±0.5 | 480±0.5 | 480±0.5 | |
| C | | 588±0.5 | 670±0.5 | - | 622±0.5 | 700±0.5 | - | 640±0.5 | 840±0.5 | 740±0.3 | 935±0.3 | 740±0.5 | 935±0.3 | 620±0.3 | 838±0.3 | 725±0.5 | 970±0.5 | 825±0.5 | 1020±0.5 | |
| D | | 90±1.0 | 90±1.0 | 80±1.0 | 90 | 90 | 100±1.0 | 100±1.0 | 100±1.0 | 105±1.0 | 105±1.0 | 105±1.0 | 105±1.0 | 105±1.0 | 105±1.0 | 110±0.5 | 110±0.5 | 125±0.5 | 125±0.5 | |
| E | | 780±0.5 | 815±0.5 | - | 796±0.5 | 815±0.5 | - | 890±0.5 | 848±0.5 | 900±0.5 | 975±0.5 | 900±0.5 | 975±0.5 | 910±0.5 | 868±0.5 | 970±0.5 | 1022±0.5 | 1060±0.5 | 1123.5±0.5 | |
| F | | 705±0.5 | 795±0.5 | - | 715±0.5 | 785±0.5 | - | 705±0.5 | 690±0.5 | 710±0.5 | 810±0.5 | 710±0.5 | 810±0.5 | 825±0.5 | 840±0.5 | 775±0.5 | 856±0.5 | 770±0.5 | 874.5±0.5 | |
| G1 closed | | 945±3.0 | 945±3.0 | - | 955 | 955 | - | 955 | 955 | 1075 | 1075 | 1075 | 1075 | 1125±3.0 | 1125±3.0 | 1205 | 1205 | 1115 | 1115 | |
| G2 open | | 1454±5.0 | 1454±5.0 | - | 1470 | 1470 | - | 1465 | 1465 | 1610 | 1610 | 1610 | 1610 | 1740±5.0 | 1740±5.0 | 590 | 590 | 1720 | 1720 | |
| H | | 327.5±0.5 | 327.5±0.5 | - | 328 | 328 | - | 328 | 328 | 330 | 330 | 330 | 330 | 380 | 380 | 374 | 374 | 420 | 420 | |
| J | | 505±0.5 | 505±0.5 | - | 600 | 600 | - | 602 | 602 | 703 | 703 | 703 | 703 | 645 | 645 | 694 | 694 | 1800 | 1800 | |
| K | | 180 | 180 | 213 | 180 | 180 | 231 | 204 | 204 | 276 | 276 | 276 | 276 | 301 | 301 | 295 | 295 | 306 | 306 | |
| L | | Ø80 | Ø80 | Ø60 | Ø80 | Ø80 | Ø70 | Ø80 | Ø80 | Ø95 | Ø95 | Ø95 | Ø95 | Ø100 | Ø100 | Ø110 | Ø110 | Ø120 | Ø120 | |
| M | | 90+1.5 | 90+1.5 | 86+1.5 | 90+1.5 | 90+1.5 | 92+2.0 | 94+2.0 | 94+2.0 | 134+2.0 | 134+2.0 | 134+2.0 | 134+2.0 | 145+2.0 | 145+2.0 | 143+2.0 | 143+2.0 | 155+2.0 | 155+2.0 | |
| N | | 19 | 19 | 35.5 | 19 | 19 | 38.5 | 24 | 24 | 36 | 36 | 36 | 36 | 40 | 40 | 38 | 38 | 40 | 40 | |
| O | | 8 | 8 | 8 | 8 | 8 | 8 | 8 | 8 | 10 | 10 | 10 | 10 | 10 | 10 | 10 | 10 | 11 | 11 | |
| P | | Ø145 | Ø145 | Ø120 | Ø145 | Ø145 | Ø130 | Ø130 | Ø130 | Ø163 | Ø163 | Ø163 | Ø163 | Ø163 | Ø163 | Ø193 | Ø193 | Ø193 | Ø193 | |
| Q | | 209 | 209 | 213 | 209 | 209 | 231 | 242 | 242 | 256 | 256 | 256 | 256 | 285 | 285 | 303 | 303 | 308 | 308 | |
| R | | Ø70 | Ø70 | Ø70 | Ø70 | Ø70 | Ø80 | Ø80 | Ø80 | Ø90 | Ø90 | Ø90 | Ø90 | Ø95 | Ø95 | Ø100 | Ø100 | Ø120 | Ø120 | |
| S | | 93+1.5 | 93+1.5 | 93+1.5 | 93+1.5 | 93+1.5 | 97+2.0 | 97+2.0 | 97+2.0 | 120+2.0 | 120+2.0 | 120+2.0 | 120+2.0 | 135+2.0 | 135+2.0 | 149+2.0 | 149+2.0 | 155+2.0 | 155+2.0 | |
| T | | 32 | 32 | 32 | 32 | 32 | 36 | 36 | 36 | 36 | 36 | 36 | 36 | 40 | 40 | 42 | 42 | 44 | 44 | |
| U | | 8 | 8 | 8 | 8 | 8 | 8 | 8 | 8 | 10 | 10 | 10 | 10 | 10 | 10 | 10 | 10 | 11 | 11 | |
| V | | Ø128 | Ø128 | Ø125 | Ø128 | Ø128 | Ø143 | Ø143 | Ø143 | Ø153 | Ø153 | Ø153 | Ø153 | Ø163 | Ø163 | Ø188 | Ø188 | Ø203 | Ø203 | |
| W | | 19 | 19 | 19 | 19 | 19 | 22 | 22 | 22 | 22 | 22 | 22 | 22 | 25 | 25 | 25 | 25 | 25 | 25 | |
| X | | 19 | 19 | - | 19 | 19 | - | 22 | 22 | 25 | 25 | 25 | 25 | 28 | 28 | 28 | 28 | 28 | 28 | |
| Y | | 19 | 19 | 19 | 19 | 19 | 22 | 22 | 22 | 22 | 22 | 22 | 22 | 25 | 25 | 25 | 25 | 25 | 25 | |
| Z | | 40 | 40 | - | 40 | 40 | - | 50 | 50 | 50 | 50 | 50 | 50 | 50 | 50 | 60 | 60 | 60 | 60 | |
| AA | | 57 | 57 | - | 58.5 | 58.5 | - | 59.5 | 59.5 | 71 | 71 | 71 | 71 | 82.5 | 82.5 | 86.5 | 86.5 | 89 | 89 | |
| BB | | 945 | 945 | 945 | 1048 | 1048 | 1075 | 1075 | 1075 | 1120 | 1120 | 1120 | 1120 | 1160 | 1160 | 1155 | 1155 | 1160 | 1160 | |
| CC | | 2550 | 2550 | 2550 | 2550/2740 | 2550/2740 | 2740 | 2740 | 2740 | 2920 | 2920 | 2920 | 2920 | 3270 | 3270 | 3424 | 3424 | 3404 | 3404 | |
| EE | | 45±0.5 | 45±0.5 | -220±0.5 | 45±0.5 | 45±0.5 | 195±1.0 | 50±1.0 | 50±1.0 | 30±0.5 | 30±0.5 | 30±0.5 | 30±0.5 | 68±0.5 | 68±0.5 | 50±0.5 | 50±0.5 | 50±0.5 | 50±0.5 | |
| FF | | 255 | 255 | 340.5 | 255/260 | 255/260 | 250 | 240 | 240 | 257 | 257 | 257 | 257 | 259 | 259 | 280 | 280 | 340 | 340 | |
| GG | | 1169 | 1169 | 1169.1 | 1231/1260 | 1231/1260 | 1197 | 1292 | 1100 | 1366 | 1366 | 1366 | 1366 | 1446 | 1446 | 1805 | 1805 | 1705 | 1705 | |
| HH | | 554 | 554 | - | 554 | 554 | - | 616.5 | 616.5 | 674 | 674 | 674 | 674 | 621 | 621 | 701 | 701 | 735.47 | 735.47 | |
| JJ | | 100 | 100 | - | 100 | 100 | - | 100 | 100 | 140 | 140 | 140 | 140 | 140 | 140 | 140 | 140 | 140 | 140 | |
| KK | | 68 | 68 | - | 68/70.6 | 68/70.6 | - | 60 | 60 | 59 | 59 | 59 | 59 | 51 | 51 | 95 | 95 | 73.8 | 73.8 | |
| LL | | 425 | 425 | 425 | 425/430 | 425/430 | 440 | 440 | 440 | 488 | 488 | 488 | 488 | 497 | 497 | 520 | 520 | 548 | 548 | |
| MM | | - | - | - | - | - | - | - | - | Ø13×Ø140 | Ø13×Ø140 | Ø13×Ø140 | Ø13×Ø140 | Ø13×Ø140 | Ø13×Ø140 | Ø13×Ø165 | Ø13×Ø165 | Ø13×Ø165 | Ø13×Ø165 | O-RING(ØA×ØB) |
| NN | | Ø12×Ø105 | Ø12×Ø105 | Φ12×Φ105 | Ø12×Ø105 | Ø12×Ø105 | Φ12×Φ120 | Ø12×Ø120 | Ø12×Ø120 | Ø12×Ø130 | Ø12×Ø130 | Ø12×Ø130 | Ø12×Ø130 | Ø13×Ø140 | Ø13×Ø140 | Ø13×Ø165 | Ø13×Ø165 | Ø13×Ø165 | Ø13×Ø165 | O-RING(ØA×ØB) |
| PP | | 1200 | 1200 | 1200 | 1262/1295 | 1262/1295 | 1233 | 1328 | 1328 | 1413 | 1413 | 1413 | 1413 | 1487 | 1487 | 1842 | 1842 | 1754.23 | 1754.23 | |
| QQ | | 1035 | 1035 | 1165 | 1125/1130 | 1125/1130 | 1322 | 1180 | 1180 | 1170 | 1170 | 1170 | 1170 | 1602 | 1602 | 1670 | 1670 | 1505 | 1505 | |
| RR | | 1186 | 1186 | 1316 | 1276/1308 | 1276/1308 | 1500 | 1358 | 1358 | 1467 | 1467 | 1467 | 1467 | 1330 | 1330 | 1755 | 1755 | 1801 | 1801 | |
| SS | | 195 | 195 | - | 195 | 195 | - | 213 | 213 | 236 | 236 | 236 | 236 | 265 | 265 | 283 | 283 | 288 | 288 | |
| TT | | 166 | 166 | 195 | 166 | 166 | 213 | 186 | 186 | 256 | 256 | 256 | 256 | 281 | 281 | 275 | 275 | 286 | 286 | |
| UU | Dump stopper angle | - | - | - | - | - | - | - | - | 72 | 72 | 72 | 72 | 77.5 | 77.5 | 67 | 67 | 76.9 | 76.9 | deg(°) |
| WW | Dump stopper length | - | - | - | - | - | - | - | - | 85 | 85 | 85 | 85 | 85 | 85 | 85 | 85 | 85 | 85 | |
| XX | Dump stopper x-direction | - | - | - | - | - | - | - | - | 173.5±1 | 173.5±1 | 173.5±1 | 173.5±1 | 179±1 | 179±1 | 213.5 | 213.5 | 213.5±1 | 213.5±1 | |
| YY | Dump stopper y-direction | - | - | - | - | - | - | - | - | 169±2 | 169±2 | 169±2 | 169±2 | 174±2 | 174±2 | 185.5 | 185.5 | 235.2±2 | 235.2±2 | |
| ZZ | Tilting stopper HH angle | 65 | 65 | - | 65 | 65 | - | 71 | 71 | 80 | 80 | 80 | 80 | 80° | 80° | 80 | 80 | 80.16 | 80.16 | deg(°) |
| S1 | | Ø24 | Ø24 | Φ20 | Ø24 | Ø24 | 24 | Ø24 | Ø24 | Ø36 | Ø36 | Ø36 | Ø36 | Ø36 | Ø36 | - | - | Ø36 | Ø36 | |
| T1 | | Ø40 | Ø40 | Φ36 | Ø40 | Ø40 | 40 | Ø40 | Ø40 | Ø36 | Ø36 | Ø36 | Ø36 | Ø36 | Ø36 | - | - | | | |
| U1 | | 8 | 8 | 8 | 8 | 8 | 8 | 8 | 8 | 27 | 27 | 27 | 27 | 27 | 27 | - | - | | | |
| V1 | | 24 | 24 | 20 | 24 | 24 | 24 | 24 | 24 | 27 | 27 | 27 | 27 | 27 | 27 | - | - | | | |
| W1 | | M12x1.75 | M12x1.75 | M10x1.5 | M12x1.75 | M12x1.75 | M12x1.75 | M12x1.75 | M12x1.75 | Spacer(M16x2) | Spacer(M16x2) | Spacer(M16x2) | Spacer(M16x2) | Spacer(M16x2) | Spacer(M16x2) | M16x2.0 | M16x2.0 | M16x2.0 | M16x2.0 | TAP |
| S2 | | Ø24 | Ø24 | Φ20 | Ø24 | Ø24 | 24 | Ø24 | Ø24 | Ø36 | Ø36 | Ø36 | Ø36 | Ø36 | Ø36 | - | - | Ø36 | Ø36 | |
| T2 | | Ø40 | Ø40 | Φ36 | Ø40 | Ø40 | 40 | Ø40 | Ø40 | Ø36 | Ø36 | Ø36 | Ø36 | Ø36 | Ø36 | - | - | | | |
| U2 | | 8 | 8 | 8 | 8 | 8 | 8 | 8 | 8 | 27 | 27 | 27 | 27 | 27 | 27 | - | - | | | |
| V2 | | 24 | 24 | 20 | 24 | 24 | 24 | 24 | 24 | 27 | 27 | 27 | 27 | 27 | 27 | - | - | | | |
| W2 | | M12x1.75 | M12x1.75 | M10x1.5 | M12x1.75 | M12x1.75 | M12x1.75 | M12x1.75 | M12x1.75 | Spacer(M16x2) | Spacer(M16x2) | Spacer(M16x2) | Spacer(M16x2) | Spacer(M16x2) | Spacer(M16x2) | M16x2.0 | M16x2.0 | M16x2.0 | M16x2.0 | TAP |
| REFERENCE | | 1.9MONO | 1.9MONO | 1.9MONO | 2.2/2.4MONO | 2.2/2.4MONO | 2.4MONO | 2.7MONO | 2.7MONO | 3.5BOT | 3.5BOT | 3.5BOT | 3.5BOT | 4.2 MH BOC | 4.2 MH BOC | 5.6 MH BOC | 5.6 MH BOC | 5.4BOT | 5.4BOT | 기준BUCKET |

1. All unit are millimeters
2. Specifications are subject to change without notice
3. HL = High Lift
4. TC = Tool Carrier